REFERENCE SEASTROM WORKMANSHIP STD. 8.4.1.W2

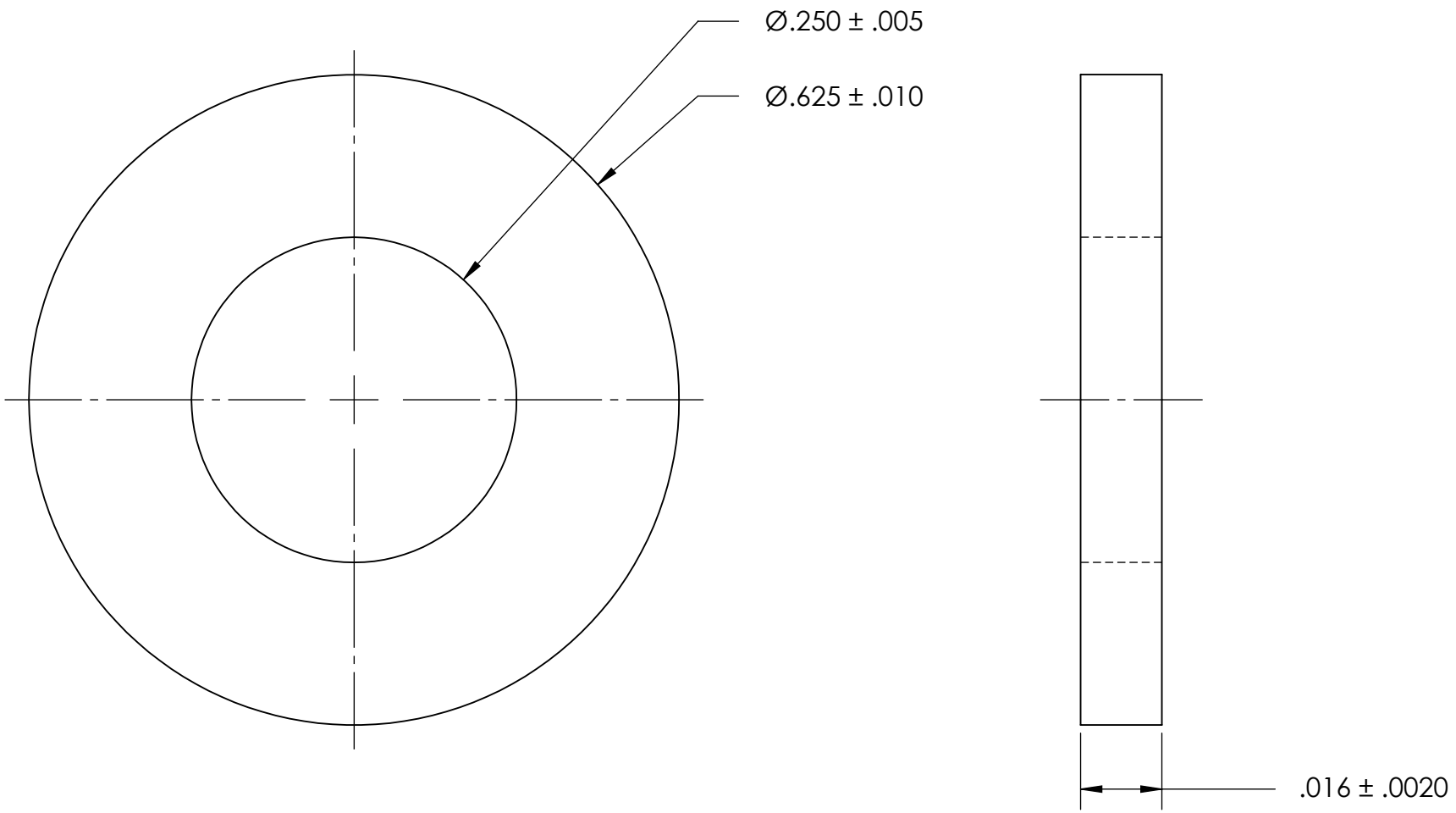

NOTES
1. NONE

PROPRIETARY AND CONFIDENTIAL
THE INFORMATION CONTAINED IN THIS DRAWING IS THE SOLE PROPERTY OF SEASTROM MANUFACTURING. ANY REPRODUCTION IN PART OR AS A WHOLE WITHOUT THE WRITTEN PERMISSION OF SEASTROM MANUFACTURING IS PROHIBITED.

DIMENSIONS ARE IN INCHES
TOLERANCES:
FRACTIONAL ±1/32
ANGULAR: MACH ±1/2 Deg
TWO PLACE DECIMAL ±.01
THREE PLACE DECIMAL ±.005

MATERIAL
ALUMINUM

FINISH
SEE NOTE 1

DRAWING IS NOT TO SCALE

	NAME	DATE
DRAWN		
CHECKED		
ENG APPR.		
MFG APPR.		
Q.A.		

COMMENTS:

SEASTROM MFG

FLAT ROUND WASHER

SIZE A | DWG. NO. 5712-328-16 | REV. -

SHEET 1 OF 1